CHAMPION®

ДЕТАЛИРОВКА МОТОПОМПЫ

GP25-II

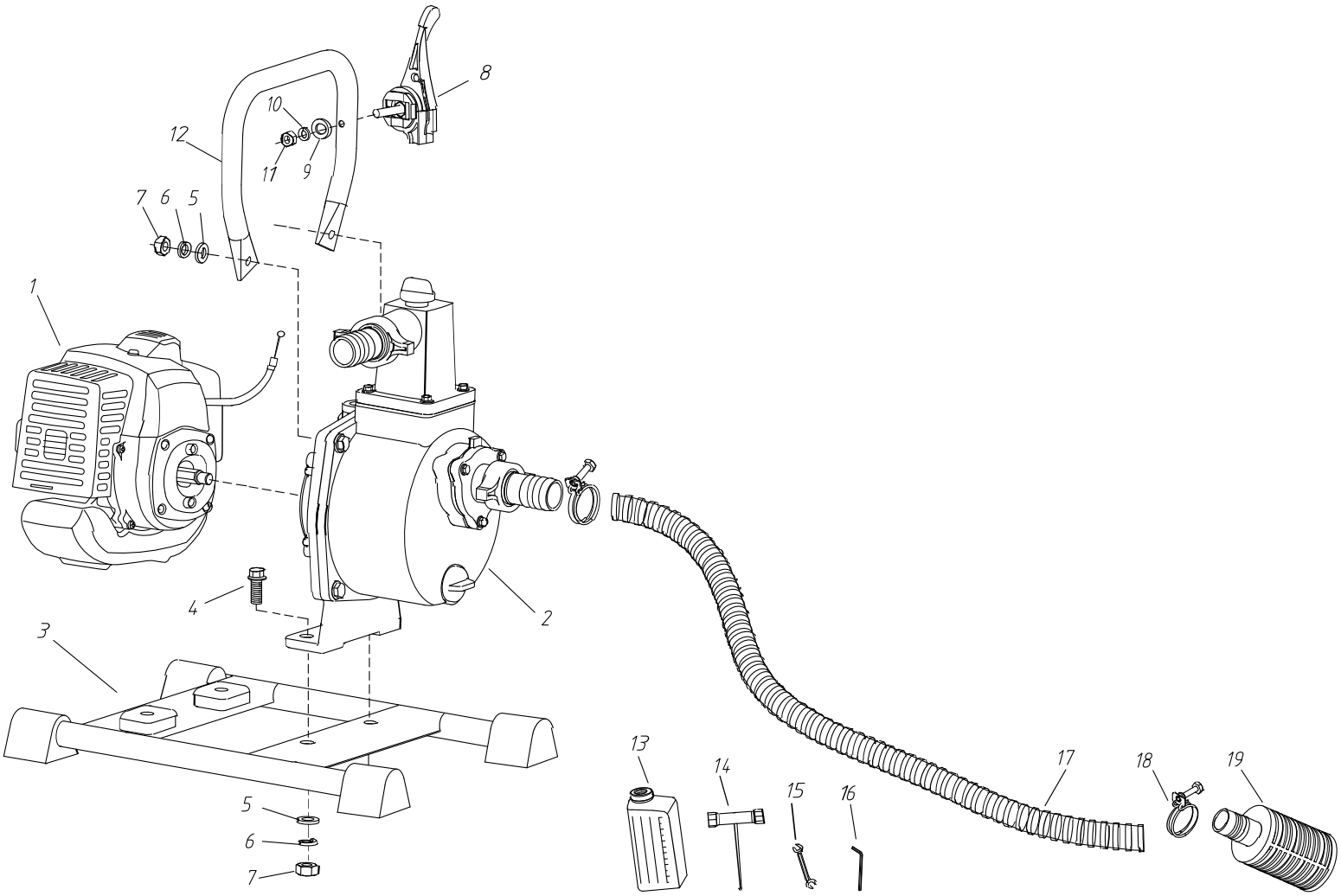
8
10
12
11
9
7
6
5
1
4
2
3
5
6
7
13
14
15
16
17
18
19

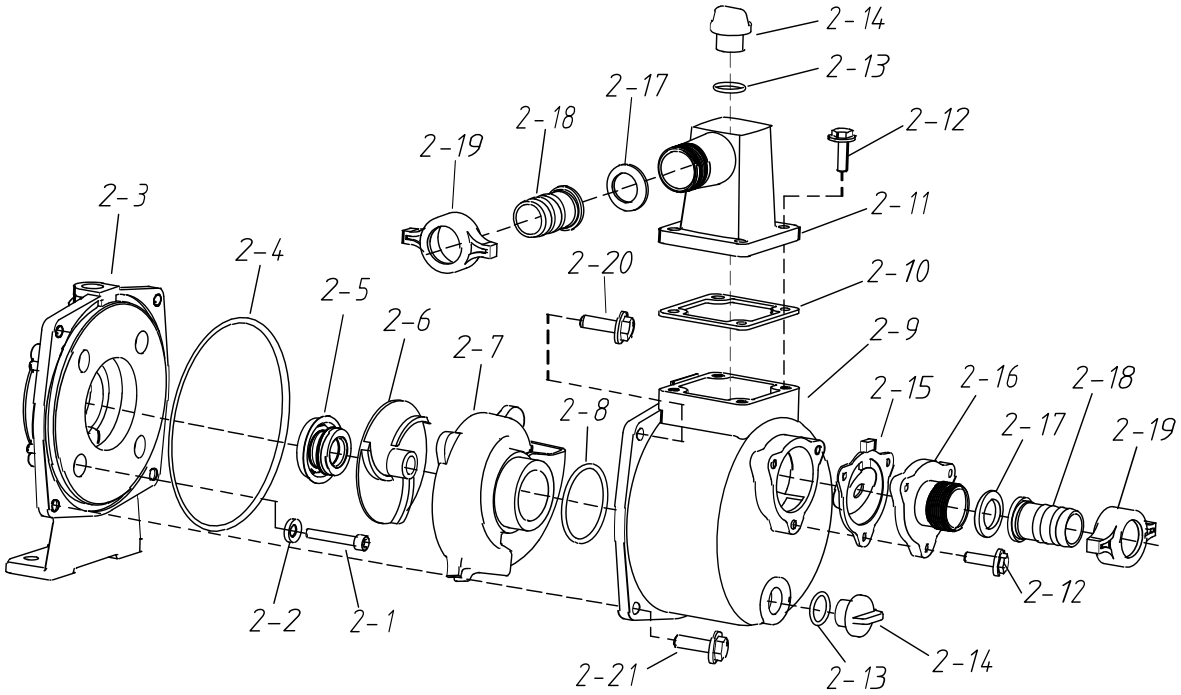
2-14
2-13
2-17
2-18
2-12
2-19
2-11
2-3
2-4
2-20
2-10
2-5
2-6
2-7
2-9
2-15
2-16
2-18
2-8
2-17
2-19
2-12
2-2
2-1
2-21
2-13
2-14

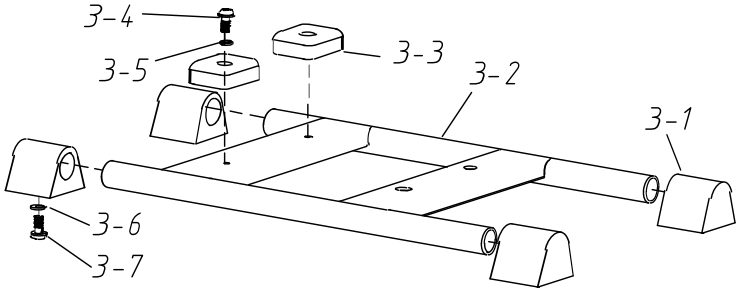
3-4
3-5
3-3
3-2
3-1
3-6
3-7

Item	Part No.	Part Name	Qty
1	51010230012	Engine assembly	1
2	02050150005	Pump assembly	1
2-1	03010010033	Hexagon socket cap screws M5×45	4
2-2	03040050050	Washer Φ6	4
2-3	02060030105	Pump Cover	1
2-4	02060030104	Pump Cover O-ring Φ160×4	1
2-5	02060030107	Machanical seal	1
2-6	02060030058	Impeller	1
2-7	02060030099	Volute Casting	1
2-8	02060030100	Volute Casting O-ring Φ41×3.55	1
2-9	02060030101	Pump Housing	1
2-10	02060030097	Dischange Flange Gasket	1
2-11	02060030096	Dischange Flange	1
2-12	03010070012	Hexagon head screws M6×20	7
2-13	02060030102	Priming Cap O-ring Φ18×3.1	2
2-14	02060030103	Priming Cap	2
2-15	02060030106	Return Valve Gasket	1
2-16	02060030098	Inlet Valve	1
2-17	02060030071	Pipe Connector Gasket	2
2-18	02060030072	Pipe Connector	2
2-19	02060030073	Connector Nut	2
2-20	03010070021	Hexagon head screws M8×35	2
2-21	03010070003	Hexagon head screws M8×20	2
3	02050150046	Base assembly	1
3-1	02080030010	Shock absorbing rubber plug	4
3-2	02020160559	Water pump base	1
3-3	02080050043	Shock absorbing rubber plug	2
3-4	03020020032	Cross recessed pan head screw assemblies M4×12	2
3-5	03040020019	Washer Φ5	2
3-6	03040010009	Washer Φ5	4
3-7	03010060087	Pan head screws with cross recess M5×12	4

Item	Part No.	Part Name	Qty
4	03010020006	Hexagon head screws M8×25	2
5	03040020018	Washer Φ8	4
6	03050010008	Washer Φ8	4
7	03030010017	Hexagon full nuts M8	4
8	02050150032	Throttle Lever	1
9	03040020020	Washer Φ5	1
10	03050010015	Washer Φ5	1
11	03030010013	Hexagon full nuts M5	1
12	02050150021	Handle	1
13	70080010003	Fuel mixture bottle (0.6L)	1
14	03080030004	Box spanner 17×19	1
15	03080020007	Open spanner 8×10	1
16	03080010006	Alley key (S=4/S=5)	1
17	02110030194	Suction pipe (1″×3m)	1
18	02020040011	Clamp φ32	3
19	02060030076	Screen assembly	1

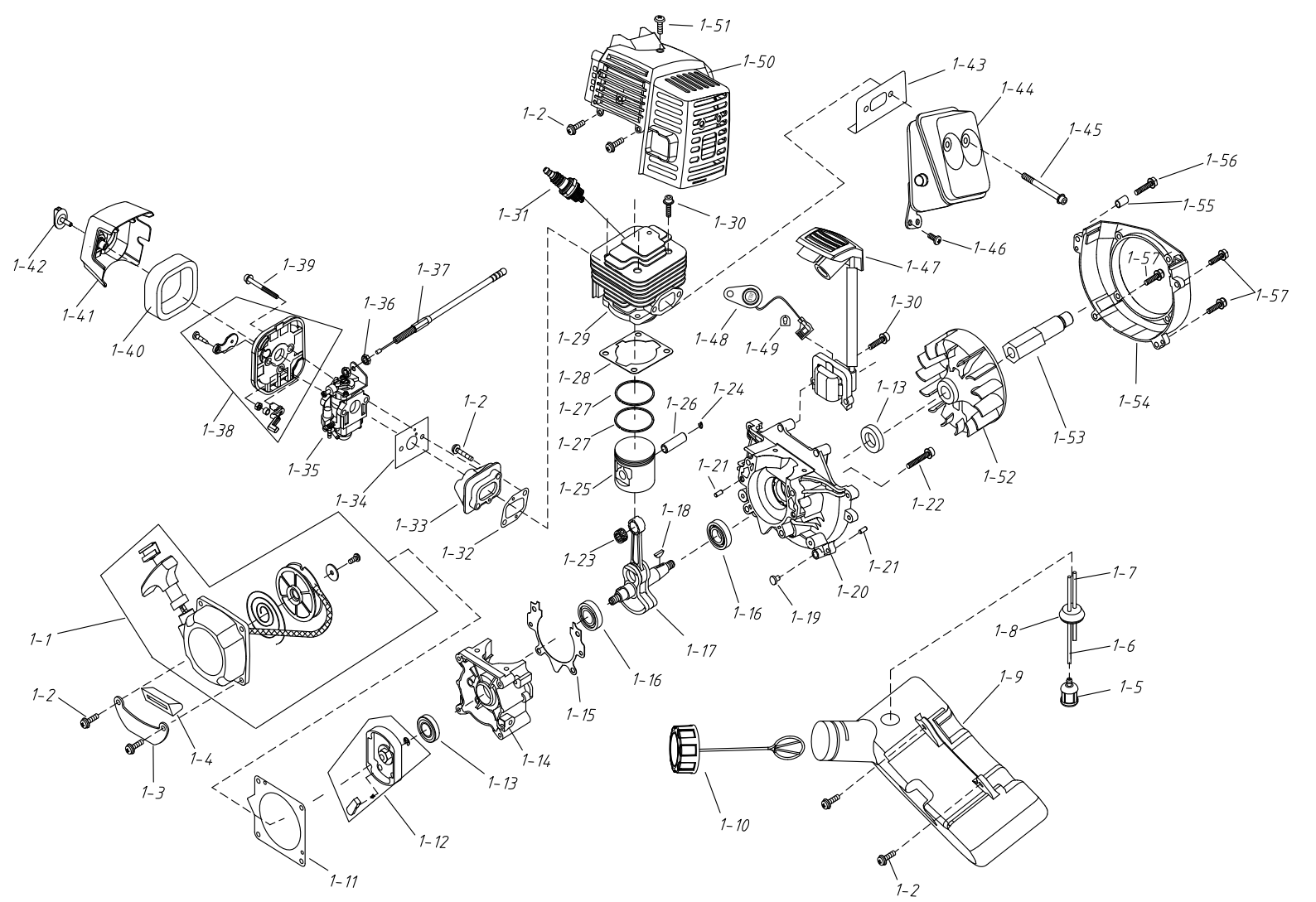
1-51
1-50
1-43
1-44
1-2
1-45
1-56
1-55
1-31
1-30
1-46
1-42
1-39
1-37
1-47
1-57
1-57
1-41
1-36
1-30
1-40
1-29
1-48
1-49
1-28
1-27
1-26
1-24
1-13
1-54
1-2
1-38
1-27
1-53
1-35
1-25
1-21
1-52
1-34
1-22
1-33
1-18
1-32
1-23
1-21
1-20
1-7
1-1
1-16
1-19
1-8
1-17
1-6
1-16
1-9
1-5
1-2
1-15
1-4
1-14
1-13
1-3
1-10
1-12
1-11
1-2

Item	Part No.	Part Name	Qty
1-1	02050070024	Starter	1
1-2	03020020012	Cross recessed pan head screw assemblies M5×20	10
1-3	02020160439	Bracket,fuel tank	1
1-4	02080020087	Rubber Cover	1
1-5	02050120002	Cleaner Cover	1
1-6	01040010014	INLET FUEL PIPE φ2.5×φ5.2	1
1-7	01040010003	OUTLET FUEL PIPE φ2.5×φ5.2	1
1-8	02080030025	Fuel pipe plug	1
1-9	70050030074	Fuel Tank	1
1-10	02110020026	Fuel Tank cap assembly	1
1-11	02010030018	Starter gasket	1
1-12	02050100006	Start Reel Ass'y	1
1-13	03100010009	Oil seal 12×22×7	2
1-14	70070050042	Rear half crank Case	1
1-15	02070010121	Crank case gasket	1
1-16	03090010034	Bearing 6201/P5	2
1-17	02020120075	Crank Shaft assembly	1
1-18	03070010002	Half round key 3×5×13	1
1-19	02070020046	Gasket Fuel Tank	2
1-20	70070050078	Front half crank case	1
1-21	03060010004	Position Pin 4×10	4
1-22	03010010069	Hexagon socket cap screws M5×30	4
1-23	03090020020	Needle Bearing	1
1-24	02020030016	Piston pin circlip	2
1-25	02010020009	piston	1
1-26	02020010006	Piston Pin	1
1-27	02020020006	Piston Ring	2
1-28	02070010034	Cylinder Gasket	1
1-29	70070130017	Cylinder	1
1-30	03010010062	Hexagon socket cap screws M5×20	6
1-31	03130010013	Spark Plug RCJ6Y	1

Item	Part No.	Part Name	Qty
1-32	02070010092	Insulator Gasket	1
1-33	70030020011	Insulator tube	1
1-34	02070010072	Carburetor Gasket	1
1-35	02050020148	Carburetor	1
1-36	03030010004	Nut M6	2
1-37	02050040164	Cable comp	1
1-38	70080120007	Cleaner Inside Cover	1
1-39	03020020047	Cross recessed pan head screw assemblies M5×50	2
1-40	02090010052	Cleaner Outside Cover	1
1-41	70030040108	Air filter cover	1
1-42	02110030079	Knob	1
1-43	02070010146	Muffler Gasket	1
1-44	02050010028	Muffler assembly	1
1-45	03010010077	Hexagon socket cap screws M5×55	2
1-46	03020020053	Cross recessed pan head screw assemblies M5×12	1
1-47	02050030115	Ignition Coil Comp.	1
1-48	02050050119	Stop Button Comp.	1
1-49	02080020012	Retaining Sleeve	1
1-50	70030030420	Guide Cover Ass'y	1
1-51	03010110007	Screw M5×12	1
1-52	02050030044	Magneto Rotor Comp.	1
1-53	02050150017	Connecting shaft	1
1-54	70070030032	Flywheel cover	1
1-55	03030070032	Copper sleeve	1
1-56	03020030028	Cross recessed hexagon bolt assemblies M5×30	1
1-57	03020030005	Cross recessed hexagon bolt assemblies M5×20	3